Starlone

EFF2

AT & CT Series

Three-Phase
TEFC
Induction
Motors

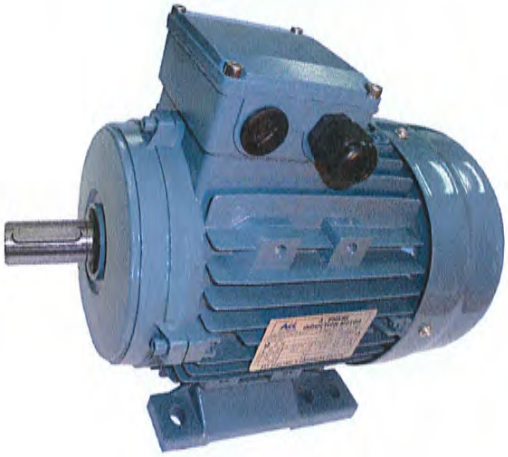

UKAS QUALITY MANAGEMENT 005

CE

HIGH EFFICIENCY

Three Phase High Efficiency TEFC Asynchronous Motor
IEC frame size: 63 to 355
Designed to meet or exceed the requirements for energy efficiency such as: IEC 60034-30 (IE2), Australia (Level 1B), CEMEP-EU (EFF1), MS 1525, SS530 and GB18613-2006.

HIGH TEMP RESISTANT

High Temperature Resistant/Smokespill Cast-Iron Induction Motor
Certified to withstand 250°C, 300°C & 400°C *(2 hours)*
Designed for demanding and critical applications, such as fire emergencies in built-up areas. These motors play a life-saving role in the swift extraction and clearance of smoke and toxic fumes at high temperatures.

SINGLE PHASE SERIES

Single Phase Aluminium Induction Motor
Specially used when only single-phase current supply is available.

DY : Capacitor Run Series
Suitable for applications with low starting torque.
DL : Dual Capacitor Series
Suitable for applications with high starting torque.

EXPLOSION-PROOF

YB2 Series Three Phase Explosion-Proof Motor
Uniquely designed to contain the sparks within the motor to prevent ignition of external combustible vapours, enabling the motor to be safely used in hazardous locations.

MOTOR COMPONENTS

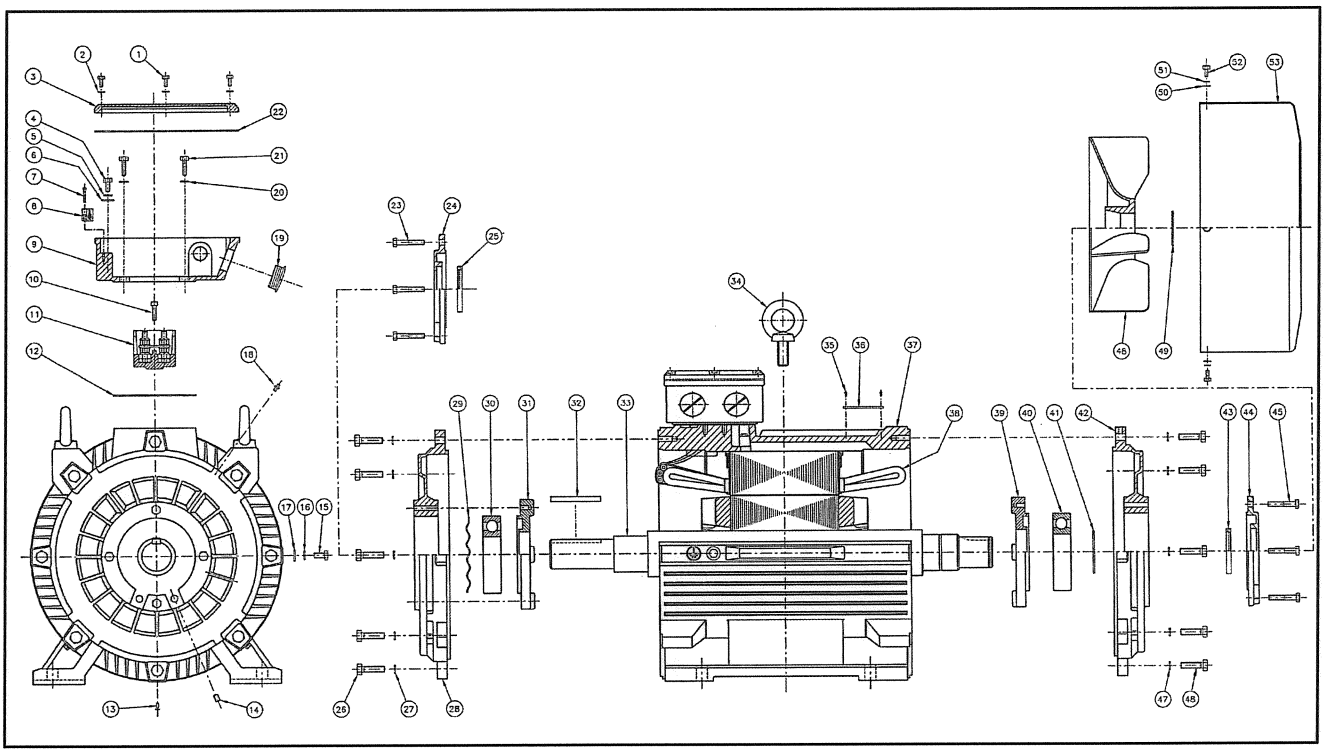

Item	Description	Frame Sizes		
		63 - 90	100 - 132	160 - 355
1	Bolt for terminal box lid	✓	✓	✓
2	Spring washer	✓	✓	✓
3	Terminal box lid	✓	✓	✓
4	Earth bolt - terminal box	✓	✓	✓
5	Spring washer	✓	✓	✓
6	Flat washer	✓	✓	✓
7	Bolt for aux. Terminal block	✓	✓	✓
8	Aux. Terminal box	✓	✓	✓
9	Terminal box lid	✓	✓	✓
10	Bolt for terminal board	✓	✓	✓
11	Terminal board as-sembly	✓	✓	✓
12	Gasket - terminal box	✓	✓	✓
13	Drain plug			✓
14	Plug - grease exhaust			✓
15	Earth bolt - frame	✓	✓	✓
16	Spring washer	✓	✓	✓
17	Flat washer	✓	✓	✓
18	Grease nipple			✓
19	Conduit entry plug	✓	✓	✓
20	Spring washer	✓	✓	✓
21	Bolt for terminal box	✓	✓	✓
22	Gasket - terminal box lid	✓	✓	✓
23	Bolt for outer b/cap - de			✓
24	Outer bearing cap - de			✓
25	Oil seal - de			✓
26	Bolt for endshield - de	✓	✓	✓
27	Spring washer	✓	✓	✓

Item	Description	Frame Sizes		
		63 - 90	100 - 132	160 - 355
28	Endshield - de	✓	✓	✓
29	Wave washer			✓
30	Bearing - de	✓	✓	✓
31	Inner bearing cap - de			✓
32	Key	✓	✓	✓
33	Rotor shaft	✓	✓	✓
34	Lifting eye		✓	✓
35	Rivet - nameplate	✓	✓	✓
36	Nameplate	✓	✓	✓
37	Frame	✓	✓	✓
38	Stator winding	✓	✓	✓
39	Inner bearing cap - nde			✓
40	Bearing - nde	✓	✓	✓
41	Circlip - bearing	✓	✓	✓
42	Endshield - nde	✓	✓	✓
43	Oil seal - nde	✓	✓	✓
44	Outer bearing cap - nde			✓
45	Bolt for outer b/cap - nde			✓
46	Bolt for endshield - nde	✓	✓	✓
47	Spring washer	✓	✓	✓
48	External fan	✓	✓	✓
49	Circlip - fan	✓	✓	✓
50	Flat washer	✓	✓	✓
51	Spring washer	✓	✓	✓
52	Bolt for fan cover	✓	✓	✓
53	Fan cover	✓	✓	✓

AT B14, B34 Mounting and Overall Dimensions

Frame Size	Overall Dimensions														
	A	AB	AC	AD	B	C	D	DH	E	F	G	H	K	KK	L
56	90	112	115	104	71	36	9	M3X10	20	3	7.2	56	5.8	1-M16X1.5	198
63	100	120	127	110	80	40	11	M4X10	23	4	8.5	63	7	1-M16X1.5	225
71	112	135	145	119	90	45	14	M5X12	30	5	11	71	7	1-M20X1.5	255
80	125	155	165	138	100	50	19	M6X16	40	6	15.5	80	10	1-M20X1.5	295
90S	140	175	180	145	100	56	24	M8X19	50	8	20	90	10	1-M20X1.5	331
90L	140	175	180	145	125	56	24	M8X19	50	8	20	90	10	1-M20X1.5	361
100L	160	200	200	155	140	63	28	M10X22	60	8	24	100	12	1-M20X1.5	392
112M	190	230	222	171	140	70	28	M10X22	60	8	24	112	12	2-M25X1.5	406
132S	216	260	260	191	140	89	38	M12X28	80	10	33	132	12	2-M25X1.5	473
132M	216	260	260	191	178	89	38	M12X28	80	10	33	132	12	2-M25X1.5	505

Frame Size	Overall Dimensions									
	M	N	P	S	T	GA	AA	BB	ED	HA
56	65	50	80	M5	2.5	10	20	89	11	5.5
63	75	60	90	M5	2.5	12.5	27	103	13	6
71	85	70	105	M6	2.5	16	28	105	20	9
80	100	80	120	M6	3	21.5	40	130	25	9
90S	115	95	140	M8	3	27	45	130	40	11
90L	115	95	140	M8	3	27	45	155	40	11
100L	130	110	160	M8	3.5	31	50	176	45	14
112M	130	110	160	M8	3.5	31	55	180	45	14
132S	165	130	200	M10	4	41	58	176	63	15
132M	165	130	200	M10	4	41	58	214	63	15

Data are subjected to revisions without any prior notice.

STANDARD SPECIFICATION AND FEATURES	
Item	Standard Specifications
Type of electric motor	Totally enclosed fan cooling squirrel cage induction motor
Design standards	BS 4999, BS 5000, IEC 60034, IEC 60072
Voltage and frequency	Standard motors available : 220-240V/380-415V/50Hz for 2.2kW & below 380-415V/660-720V/50Hz for 3kW & above Other voltages such as 200V, 346V, 440V, 460V & 60Hz etc an be suppied on request
Power conditions	± 10% of rated voltage
Time duty	Continuous S1 duty
Cooling method	Self external fan, surface cooling (IC 411)
Method of starting	Full voltage direct on line starting or star-delta starting
Mounting	Horizontal foot mounting, flange mounting : B3 ; B5 ; B14 ; B34 ; B35 ; V1
Stator insulation	Class F insulation; Class B temperature rise
Rotor winding	Squirrel cage, aluminum conductor with end-ring and wafter blades integrally cast
Environmental conditions	Place : Shadow, non-hazardous Ambient temperature : -20°C to 40°C Relative humidity : Less than 90% RH (non-condensation) Altitude : Less than 1,000m
Direction of rotation	Standard motors are suitable for operation in either direction of rotation. Direction of rotation of motor can be reversed by interchanging any two phases
Test procedure	IEC and full voltage measuring starting operation
Shaft	Carbon steel, round shaft with key
Bearing	Motors of frame sizes 160 and below are fitted with life-lubricated bearings Motors of frame sizes 180 and above are fitted with open bearings and regreasing device
Painting	Phenolic rust-proof base plus lacquer surface finish; Painting in blue colour
Nameplate	Stainless steel or aluminium
Grounding terminal	Set inside the terminal box

Table 1: Vibration

Frame size	≤ 132	≤ 132	> 132 - 225	> 132 - 225	> 225 - 355	> 225 - 355
Synchronous speed	600 - 1800	> 1800 - 3600	600 - 1800	> 1800 - 3600	600 - 1800	> 1800 - 3600
Vibration class	Effective value of vibration speed mm/s					
N	1.8	1.8	2.8	2.8	3.5	3.5
R	0.71	1.12	1.12	1.8	1.8	2.8
S	0.45	0.71	0.71	1.12	1.12	1.8
Standard motors are designed to vibration class N(normal), vibration class R(reduced) and class S(special) are available on request.						

Diagram 2: Mounting Arrangements

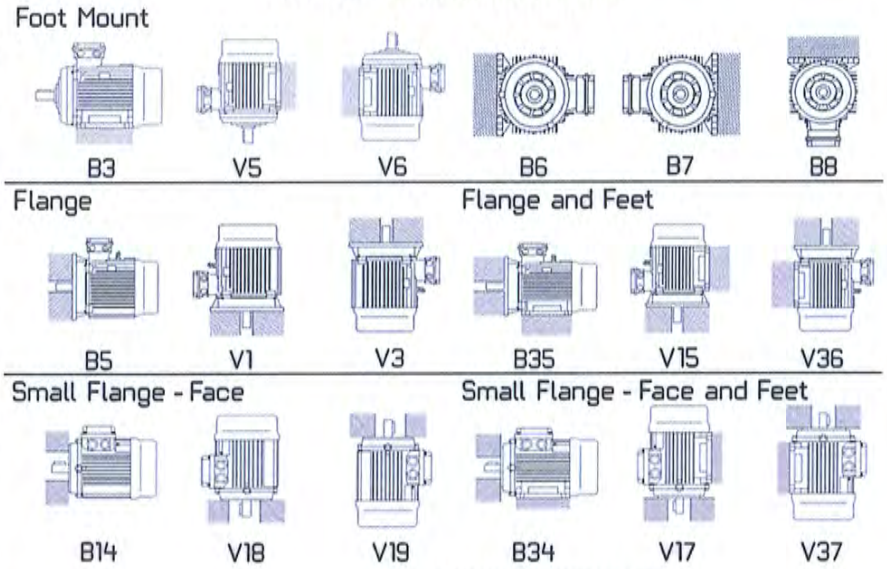

Diagram 3: Connection

Three-phase motors with cage rotor

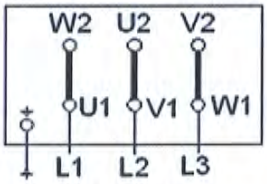

Star Connection

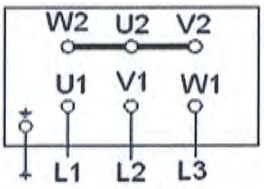

Delta Connection

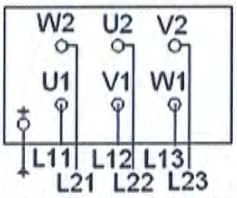

Connection to Star-Delta Starter

Multi-speed motors in Dahlander connection (Tapped winding)

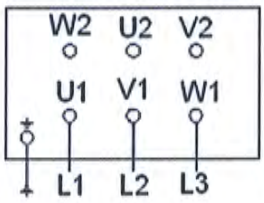

Low Speed

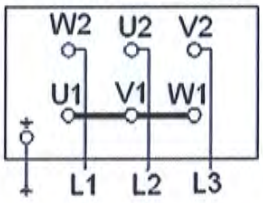

High Speed

Multi-speed motors with 2 separate windings

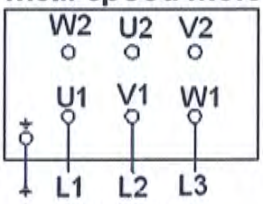

Low Speed

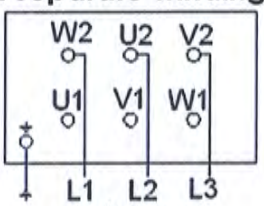

High Speed

AT B3, B5, B35 Mounting and Overall Dimensions

Frame Size	Overall Dimensions																
	A	AB	AC	AD	B	C	D	DH	E	F	G	H	K	KK	L	M	N
56	90	112	115	104	71	36	9	M3X10	20	3	7.2	56	5.8	1-M16X1.5	198	98	80
63	100	120	127	110	80	40	11	M4X10	23	4	8.5	63	7	1-M16X1.5	225	115	95
71	112	135	145	119	90	45	14	M5X12	30	5	11.0	71	7	1-M20X1.5	255	130	110
80	125	155	165	138	100	50	19	M6X16	40	6	15.5	80	10	1-M20X1.5	295	165	130
90S	140	175	180	145	100	56	24	M8X19	50	8	20.0	90	10	1-M20X1.5	331	165	130
90L	140	175	180	145	125	56	24	M8X19	50	8	20.0	90	10	1-M20X1.5	361	165	130
100L	160	200	200	155	140	63	28	M10X22	60	8	24.0	100	12	1-M20X1.5	392	215	180
112M	190	230	222	171	140	70	28	M10X22	60	8	24.0	112	12	2-M25X1.5	406	215	180
132S	216	260	260	191	140	89	38	M12X28	80	10	33.0	132	12	2-M25X1.5	473	265	230
132M	216	260	260	191	178	89	38	M12X28	80	10	33.0	132	12	2-M25X1.5	505	265	230

Frame Size	Overall Dimensions									
	P	S	T	GA	AA	BB	ED	HA	LA	LB
56	120	7	3.0	10.0	20	89	11	5.5	8	175
63	140	10	3.0	12.5	27	103	13	6.0	8	207
71	160	10	3.5	16.0	28	105	20	9.0	8	220
80	200	12	3.5	21.5	40	130	25	9.0	10	260
90S	200	12	3.5	27.0	45	130	40	11.0	12	270
90L	200	12	3.5	27.0	45	155	40	11.0	12	295
100L	250	15	4.0	31.0	50	176	45	14.0	14	330
112M	250	15	4.0	31.0	55	180	45	14.0	14	345
132S	300	15	4.0	41.0	58	176	63	15.0	16	375
132M	300	15	4.0	41.0	58	214	63	15.0	16	410

Data are subjected to revisions without any prior notice.

AT Performance Data 60Hz

Synchrnous speed (2Pole/3600rpm, 4Pole/1800rpm, 6Pole/1200rpm, 8Pole/900rpm)

Rated Power KW	Rated Power HP	Pole	Frame Size	Rated Speed (RPM)	IFL 440V (A)	IFL 460V (A)	IFL 480V (A)	Power Factor COSø	Efficiency η %	IST IFL (Time)	TFL (Nm)	TST TFL (Time)	TM TFL (Time)	Moment of Inertia (Kgm²)	Weight (Kg)
0.06	0.08	4	56-1	1584	0.22	0.21	0.21	0.59	48.5	6.0	0.36	2.3	2.4	0.000064	3.0
0.09	0.12	2	56-1	3204	0.28	0.26	0.25	0.65	57.0	6.0	0.27	2.2	2.4	0.000053	2.8
		4	56-2	1584	0.30	0.29	0.28	0.61	50.0	6.0	0.54	2.3	2.4	0.000070	3.3
0.12	0.16	2	56-2	3276	0.36	0.35	0.33	0.69	62.0	6.0	0.35	2.2	2.4	0.000057	3.2
		4	63-1	1620	0.41	0.40	0.38	0.64	57.0	6.0	0.71	2.2	2.4	0.000117	3.9
0.18	0.25	2	63-1	3252	0.48	0.45	0.44	0.75	63.0	6.0	0.53	2.2	2.4	0.000100	4.0
		4	63-2	1644	0.64	0.61	0.59	0.65	59.0	6.0	1.05	2.2	2.4	0.000136	4.3
		6	71-1	1056	0.66	0.63	0.60	0.66	56.0	4.0	1.63	1.6	1.7	0.000432	6.0
		8	80-1	816	1.00	0.96	0.92	0.61	51.0	2.8	2.11	1.5	1.7	0.001146	9.9
0.25	0.33	2	63-2	3252	0.64	0.61	0.59	0.78	65.0	6.0	0.73	2.2	2.4	0.000113	4.4
		4	71-1	1620	0.73	0.70	0.67	0.72	60.0	6.0	1.47	2.2	2.4	0.000423	5.4
		6	71-2	1080	0.83	0.79	0.76	0.70	59.0	4.0	2.21	2.1	2.2	0.000468	6.5
		8	80-2	816	1.22	1.16	1.12	0.61	56.0	2.7	2.93	1.6	2.0	0.001263	10.9
0.37	0.5	2	71-1	3276	0.95	0.91	0.87	0.78	65.0	6.0	1.08	2.2	2.4	0.000348	5.6
		4	71-2	1644	1.09	1.04	1.00	0.74	65.0	6.0	2.15	2.2	2.4	0.000468	6.2
		6	80-1	1044	1.17	1.12	1.07	0.70	62.0	4.0	3.39	1.9	1.9	0.001268	8.2
		8	90S	816	1.49	1.43	1.37	0.63	63.0	2.8	4.33	1.6	1.8	0.003160	14.8
0.55	0.75	2	71-2	3312	1.30	1.24	1.19	0.79	71.0	6.0	1.59	2.2	2.4	0.000400	6.1
		4	80-1	1668	1.59	1.52	1.46	0.75	67.0	6.0	3.15	2.2	2.4	0.001146	9.0
		6	80-2	1080	1.90	1.82	1.74	0.72	67.0	4.0	4.87	2.0	2.3	0.001392	9.9
		8	90L	816	1.99	1.90	1.82	0.65	66.0	3.0	6.44	1.6	1.8	0.003794	17.2
0.75	1	2	80-1	3324	1.66	1.59	1.52	0.84	73.0	6.0	2.16	2.2	2.4	0.000916	9.1
		4	80-2	1656	1.81	1.73	1.66	0.78	72.0	6.0	4.33	2.2	2.4	0.001263	10.0
		6	90S	1104	2.07	1.98	1.90	0.72	69.0	5.5	6.49	2.2	2.2	0.003160	11.7
		8	100LA	852	2.16	2.07	1.98	0.67	66.0	3.5	8.41	1.7	2.1	0.004311	17.5
1.1	1.5	2	80-2	3324	2.33	2.23	2.14	0.83	76.2	6.0	3.16	2.2	2.4	0.000990	10.2
		4	90S	1680	2.66	2.54	2.44	0.79	76.2	6.0	6.26	2.2	2.4	0.002761	12.1
		6	90L	1110	2.94	2.81	2.69	0.73	72.0	5.5	9.47	2.2	2.2	0.003794	15.1
		8	100LB	852	3.28	3.14	3.01	0.69	72.0	3.5	12.34	1.7	2.1	0.005095	19.7
1.5	2	2	90S	3408	3.02	2.89	2.77	0.84	78.5	6.0	4.21	2.2	2.4	0.002462	12.0
		4	90L	1680	3.28	3.14	3.01	0.80	78.5	6.0	8.53	2.2	2.4	0.003283	14.6
		6	100L	1134	3.63	3.47	3.33	0.76	74.0	6.0	12.64	2.2	2.2	0.004605	19.1
		8	112M	852	4.40	4.21	4.04	0.68	74.0	4.2	16.82	1.8	2.1	0.006949	25.6
2.2	3	2	90L	3372	4.54	4.35	4.16	0.85	81.0	6.0	6.23	2.2	2.4	0.002815	15.0
		4	100LA	1716	4.65	4.44	4.26	0.81	81.0	7.0	12.25	2.2	2.3	0.005419	21.0
		6	112M	1146	5.01	4.79	4.59	0.76	78.0	6.0	18.34	2.2	2.2	0.006949	25.4
		8	132S	864	6.05	5.78	5.54	0.70	75.0	5.5	24.33	2.0	2.0	0.012912	35.5
3	4	2	100L	3408	5.61	5.37	5.15	0.86	82.6	7.0	8.41	2.2	2.3	0.002930	22.3
		4	100LB	1704	5.87	5.62	5.38	0.81	82.6	7.0	16.82	2.2	2.3	0.006704	24.7
		6	132S	1152	6.56	6.28	6.02	0.76	79.0	6.5	24.88	2.0	2.0	0.012912	36.1
		8	132M	864	6.91	6.61	6.33	0.74	77.0	5.5	33.18	2.0	2.0	0.016082	45.0
3.7	5	2	112M	3456	7.10	6.79	6.51	0.87	84.2	7.5	10.23	2.2	2.3	0.003021	26.7
		4	112M	1740	7.27	6.96	6.67	0.83	85.0	7.0	20.32	2.2	2.2	0.009418	30.5
		6	132MA	1152	8.55	8.18	7.84	0.73	80.0	6.5	30.69	2.0	2.0	0.016082	45.0
4	5.5	2	112M	3456	7.17	6.86	6.57	0.87	84.2	7.5	11.06	2.2	2.3	0.003021	26.7
		4	112M	1716	7.69	7.35	7.05	0.82	84.2	7.0	22.27	2.2	2.2	0.009418	30.5
		6	132MA	1152	8.64	8.26	7.92	0.76	81.0	6.5	33.18	2.0	2.0	0.016082	45.0
5.5	7.5	2	132SA	3480	9.67	9.25	8.87	0.88	85.7	7.5	15.10	2.0	2.2	0.006496	38.5
		4	132S	1728	10.00	9.57	9.17	0.84	85.7	7.0	30.14	2.2	2.2	0.029500	40.4
		6	132MB	1152	11.40	10.90	10.45	0.77	83.0	6.5	45.62	2.0	2.0	0.019174	55.5
7.5	10	2	132SB	3504	12.95	12.39	11.88	0.88	87.0	7.5	20.45	2.0	2.2	0.007838	42.2
		4	132M	1740	13.65	13.05	12.51	0.84	87.0	7.0	41.19	2.2	2.2	0.029600	49.6

Note : 1. IFL = Full load current ; IST = Locked rotor current ; TFL = Full load torque ; TST = Locked rotor torque ; TM = Maximum torque

2. Tolerance according to IEC 60034-1

3. The data above is based on 50Hz 400V design, other data is the reference value.

Starlone motors comply to the international standard IEC60034-5. This standard specifies the Degree of Protection of each electric equipment, commonly known as the "IP' code.

Which degree of protection best suits your needs?

Example of designation:

IP 5 5

Characteristic letter
First characteristic numeral (See Table 3)
Second characteristic numeral (See Table 4)

First characteristic numeral:

The first characteristic numeral indicates the degree of protection provided to different parts of the machine within the enclosure.

First characteristic numeral	Degree of protection	
	Brief description	Definition
5	Dust-protected machine	Foreign objects are unable to enter the enclosure. Ingress of dust is not totally prevented but dust does not enter in sufficient quantity to interfere with satisfactory operation of the machine.
6	Dust-tight machine	Ingress of dust totally prevented.

Table 4: *Degrees of protection indicated by the first characteristic numeral*

Second characteristic numeral	Degree of protection	
	Brief description	Definition
5	Machine protected against water jet	Water projected by a nozzle against the machine from any direction shall have no harmful effect.
6	Machine protected against heavy seas	Water from heavy seas or water projected in powerful jets shall not enter the machine in harmful quantities.

Table 5: *Degrees of protection indicated by the second characteristic numeral*

Bearing size		
Frame	*DE*	*NDE*
56	6201ZZC3	6201ZZC3
63	6201ZZC3	6201ZZC3
71	6202ZZC3	6202ZZC3
80	6204ZZC3	6204ZZC3
90	6205ZZC3	6205ZZC3
100	6206ZZC3	6206ZZC3
112	6306ZZC3	6306ZZC3
132	6308ZZC3	6308ZZC3
160	6309C3	6309C3
180	6311C3	6311C3
200	6312C3	6312C3
225	6313C3	6313C3
250	6314C3	6314C3
280 2P	6314C3	6314C3
280 4P-8P	6316C3	6316C3
315 2P (Horizontal)	6316C3	6316C3
315 2P (Vertical)	6316C3	7316
315 4P-8P (Horizontal)	NU319C3	6319C3
315 4P-8P (Vertical)	NU319C3	7319
355 2P (Horizontal)	6319C3	6319C3
355 2P (Vertical)	6319C3	7319
355 4P-8P (Horizontal)	NU322C3	6322C3
355 4P-8P (Vertical)	NU322C3	7322

Table 6: *Bearing Sizes*

CT Performance Data 50Hz

Synchrnous speed (2Pole/3000rpm, 4Pole/1500rpm, 6Pole/1000rpm, 8Pole/750rpm)

Rated Power KW	Rated Power HP	Pole	Frame Size	Rated Speed (RPM)	IFL 380V (A)	IFL 400V (A)	IFL 415V (A)	Power Factor COSø	Efficiency %	IST IFL (Time)	TFL (Nm)	TST TFL (Time)
0.18	0.25	6	71-1	850	0.74	0.70	0.67	0.66	56.0	4.0	2.0	1.9
0.18		8	80-1	630	0.88	0.84	0.81	0.61	51.2	2.9	2.8	2.0
0.25	0.33	4	71-1	1360	0.72	0.68	0.66	0.76	70.0	3.7	1.8	2.4
0.25		6	71-2	850	0.95	0.90	0.87	0.68	59.0	4.0	2.8	1.9
0.25		8	80-2	640	1.15	1.09	1.05	0.61	54.2	3.0	3.7	2.1
0.37	0.5	2	71-1	2750	1.02	0.97	0.93	0.78	70.0	4.3	1.3	2.2
0.37		4	71-2	1345	1.11	1.11	1.02	0.74	71.3	3.7	2.6	2.4
		6	80-1	890	1.30	1.23	1.19	0.70	62.5	4.4	4.0	1.9
		8	90S	660	1.48	1.41	1.36	0.61	62.2	3.4	5.4	2.0
0.55	0.75	2	71-2	2760	1.49	1.42	1.36	0.79	71.0	4.9	1.9	2.5
0.55		4	80-1	1390	1.60	1.50	1.43	0.75	71.4	5.5	3.8	2.2
0.55		6	80-2	890	1.79	1.70	1.64	0.72	65.0	4.5	5.9	2.1
0.55		8	90L	660	2.16	2.05	1.98	0.61	63.3	3.5	8.0	2.1
0.75	1	2	80-1	2840	1.80	1.70	1.67	0.83	75.5	5.5	2.5	2.3
0.75		4	80-2	1390	2.10	2.00	1.90	0.76	73.5	5.6	5.2	2.2
0.75		6	90S	910	2.29	2.18	2.10	0.72	69.1	4.1	7.9	2.3
0.75		8	100L-1	690	2.41	2.29	2.21	0.67	70.5	3.5	10.4	2.0
1.1	1.5	2	80-2	2840	2.60	2.50	2.40	0.84	76.1	5.6	3.7	2.3
1.1		4	90S	1400	2.90	2.80	2.70	0.77	76.2	5.4	7.5	2.2
1.1		6	90L	910	3.18	3.02	2.91	0.73	72.0	4.6	11.5	2.3
1.1		8	100L-2	690	3.35	3.18	3.07	0.69	72.4	3.6	15.2	2.2
1.5	2	2	90S	2850	3.40	3.20	3.10	0.85	79.5	6.1	5.0	2.5
1.5		4	90L	1400	3.80	3.60	3.50	0.78	78.7	5.2	10.2	2.4
1.5		6	100L	920	4.10	3.90	3.80	0.75	76.0	5.0	15.6	2.4
1.5		8	112M	690	4.40	4.20	4.00	0.70	74.5	3.9	20.8	2.4
2.2	3	2	90L	2850	4.80	4.60	4.40	0.85	81.7	6.1	7.4	2.7
		4	100L-1	1420	5.10	4.80	4.70	0.81	81.0	6.0	14.8	2.3
		6	112M	940	5.57	5.29	5.10	0.76	79.1	5.2	22.4	2.1
		8	132S	710	5.90	5.60	5.40	0.71	79.3	4.3	29.6	2.3
3	4	2	100L	2880	6.30	6.00	5.80	0.87	83.1	6.5	10.0	2.7
		4	100L-2	1420	6.80	6.50	6.20	0.82	82.7	6.1	20.2	2.3
		6	132S	960	7.40	7.00	6.80	0.76	81.3	5.6	29.9	1.9
		8	132M	710	7.80	7.40	7.10	0.73	80.1	4.4	40.4	2.2
3.7	5	2	112M	2880	7.70	7.30	7.00	0.88	83.5	6.5	12.3	2.6
		4	112M	1440	8.14	7.77	7.49	0.82	84.5	6.5	26.5	2.3
		6	132M-1	960	9.00	8.51	8.23	0.76	82.3	6.2	39.8	2.1
		8	160M-1	720	9.40	9.00	8.60	0.73	81.6	4.4	53.1	2.2
4	5.5	2	112M	2880	8.30	7.90	7.60	0.88	83.5	6.5	13.3	2.6
		4	112M	1440	8.80	8.40	8.10	0.82	84.5	6.5	26.5	2.3
		6	132M-1	960	9.75	9.26	8.93	0.76	82.3	6.2	39.8	2.1
		8	160M-1	720	10.20	9.70	9.30	0.73	81.6	4.4	53.1	2.2
5.5	7.5	2	132S-1	2900	11.10	10.50	10.20	0.88	85.7	6.9	18.1	2.3
		4	132S	1440	11.70	11.10	10.70	0.83	85.7	6.8	36.5	2.3
		6	132M-2	960	12.80	12.20	11.70	0.77	84.7	6.5	54.7	2.3
		8	160M-2	720	13.60	12.90	12.50	0.74	83.3	5.0	73.0	2.2
7.5	10	2	132S-2	2900	14.90	14.20	13.50	0.88	87.2	6.9	24.5	2.5
		4	132M	1440	15.60	14.80	14.30	0.84	87.1	6.5	49.8	2.4
		6	160M	970	17.10	16.20	15.70	0.77	86.6	5.6	73.9	2.0
		8	160L	720	17.70	16.80	16.20	0.75	85.9	5.7	99.5	2.1
11	15	2	160M-1	2930	21.10	20.10	19.40	0.89	88.7	6.7	35.8	2.6
		4	160M	1460	22.50	21.40	20.60	0.84	88.6	6.9	72.0	2.3
		6	160L	970	24.50	23.30	22.40	0.78	87.6	5.8	108.0	2.1
		8	180L	730	25.40	24.10	23.30	0.75	87.8	5.6	144.0	2.3
15	20	2	160M-2	2930	28.60	27.20	26.20	0.89	89.5	6.7	48.8	2.6
		4	160L	1460	30.30	28.80	27.70	0.85	89.5	6.8	98.2	2.3
		6	180L	970	31.60	30.00	28.90	0.81	89.0	5.7	148.0	2.0
		8	200L	730	34.00	32.30	31.10	0.76	88.3	5.5	196.0	2.1

Note : 1. IFL = Full load current ; IST = Locked rotor current ; TFL = Full load torque ; TST = Locked rotor torque ; TM = Maxim

2. Tolerance according to IEC 60034-1

3. The data above is based on 400V design, 380V and 415V data is the reference value.

AT Performance Data 50Hz

Synchrnous speed (2Pole/3000rpm, 4Pole/1500rpm, 6Pole/1000rpm, 8Pole/750rpm)

Rated Power KW	Rated Power HP	Pole	Frame Size	Rated Speed (RPM)	IFL 380V (A)	IFL 400V (A)	IFL 415V (A)	Power Factor COSø	Efficiency η %
0.06	0.08	4	56-1	1320	0.32	0.30	0.29	0.59	48.5
0.09	0.12	2	56-1	2670	0.37	0.35	0.34	0.65	57.0
		4	56-2	1320	0.45	0.43	0.41	0.61	50.0
0.12	0.16	2	56-2	2730	0.42	0.40	0.39	0.69	62.0
		4	63-1	1350	0.49	0.47	0.45	0.64	57.0
0.18	0.25	2	63-1	2710	0.58	0.55	0.53	0.75	63.0
		4	63-2	1350	0.72	0.68	0.66	0.65	59.0
		6	71-1	880	0.74	0.70	0.67	0.66	56.0
		8	80-1	680	0.88	0.84	0.81	0.61	51.0
0.25	0.33	2	63-2	2710	0.75	0.71	0.68	0.78	65.0
		4	71-1	1350	0.88	0.84	0.81	0.72	60.0
		6	71-2	900	0.92	0.87	0.84	0.70	59.0
		8	80-2	680	1.12	1.06	1.02	0.61	56.0
0.37	0.5	2	71-1	2730	1.11	1.05	1.01	0.78	65.0
		4	71-2	1370	1.17	1.11	1.07	0.74	65.0
		6	80-1	900	1.29	1.23	1.19	0.70	62.0
		8	90S	680	1.42	1.35	1.30	0.63	63.0
0.55	0.75	2	71-2	2760	1.49	1.42	1.37	0.79	71.0
		4	80-1	1370	1.66	1.58	1.52	0.75	67.0
		6	80-2	900	1.74	1.65	1.59	0.72	67.0
		8	90L	680	1.95	1.85	1.78	0.65	66.0
0.75	1	2	80-1	2770	1.86	1.77	1.71	0.84	73.0
		4	80-2	1380	2.03	1.93	1.86	0.78	72.0
		6	90S	920	2.29	2.18	2.10	0.72	69.0
		8	100LA	710	2.58	2.45	2.36	0.67	66.0
1.1	1.5	2	80-2	2770	2.64	2.51	2.42	0.83	76.2
		4	90S	1400	2.78	2.64	2.54	0.79	76.2
		6	90L	925	3.18	3.02	2.91	0.73	72.0
		8	100LB	710	3.37	3.20	3.08	0.69	72.0
1.5	2	2	90S	2840	3.45	3.28	3.16	0.84	78.5
		4	90L	1400	3.63	3.45	3.33	0.80	78.5
		6	100L	945	4.05	3.85	3.71	0.76	74.0
		8	112M	710	4.53	4.30	4.14	0.68	74.0
2.2	3	2	90L	2840	4.85	4.61	4.44	0.85	81.0
		4	100LA	1420	5.09	4.84	4.67	0.81	81.0
		6	112M	955	5.64	5.36	5.17	0.76	78.0
		8	132S	720	6.27	5.96	5.74	0.71	75.0
3	4	2	100L	2840	6.35	6.03	5.81	0.87	82.6
		4	100LB	1420	6.81	6.47	6.24	0.81	82.6
		6	132S	960	7.59	7.21	6.95	0.76	79.0
		8	132M	720	8.11	7.70	7.42	0.73	77.0
3.7	5	2	112M	2880	7.68	7.30	7.04	0.87	84.2
		4	112M	1430	8.04	7.64	7.36	0.83	85.0
		6	132MA	960	9.19	8.73	8.41	0.76	81.0
4	5.5	2	112M	2880	8.29	7.88	7.60	0.87	84.2
		4	112M	1430	8.69	8.26	7.96	0.83	84.2
		6	132MA	960	9.94	9.44	9.10	0.76	81.0
5.5	7.5	2	132SA	2900	11.08	10.53	10.15	0.88	85.7
		4	132S	1450	11.61	11.03	10.63	0.84	85.7
		6	132MB	960	13.07	12.42	11.97	0.77	83.0
7.5	10	2	132SB	2920	14.88	14.14	13.63	0.88	87.0
		4	132M	1450	15.41	14.64	14.11	0.85	87.0

Note : 1. IFL = Full load current ; IST = Locked rotor current ; TFL = Full load torque ; TST = Locl

2. Tolerance according to IEC 60034-1

3. The data above is based on 400V design, 380V and 415V data is the reference value.

CT B5/V1 Flange Mounting Dimensions

F#71~90 without lifting bolt

Frame	Poles	Mounting dimensions(mm)									Overall dimensions(mm)							
Size		D	E	F	G	M	N	P	S	T	AC	AD	ED	KK	DH	GA	LA	L
71	2,4,6	14j6	30	5	11	130	110	160	4-ø9	3.5	150	125	20	M25x1.5	M4X10	16	8	250
80	2,4,6,8	19j6	40	6	15.5	165	130	200	4-ø12	3.5	175	140	22	M25X1.5	M6X16	21.5	12	295
90S	2,4,6,8	24j6	50	8	20	165	130	200	4-ø12	3.5	190	150	32	M25X1.5	M8X19	27	12	320
90L	2,4,6,8	24j6	50	8	20	165	130	200	4-ø12	3.5	190	150	32	M25X1.5	M8X19	27	12	345
100	2,4,6,8	28j6	60	8	24	215	180	250	4-ø14.5	4	215	160	40	M32X1.5	M10X22	31	14	385
112	2,4,6,8	28j6	60	8	24	215	180	250	4-ø14.5	4	236	185	40	M32X1.5	M10X22	31	14	410
132S	2,4,6,8	38k6	80	10	33	265	230	300	4-ø14.5	4	275	205	56	M32X1.5	M12X28	41	14	480
132M	2,4,6,8	38k6	80	10	33	265	230	300	4-ø14.5	4	275	205	56	M32X1.5	M12X28	41	14	520
160M	2,4,6,8	42k6	110	12	37	300	250	350	4-ø14.5	5	330	250	80	M40X1.5	M16X36	45	15	610
160L	2,4,6,8	42k6	110	12	37	300	250	350	4-ø18.5	5	330	250	80	M40X1.5	M16X36	45	15	655
180M	2,4,6,8	48k6	110	14	42.5	300	250	350	4-ø18.5	5	380	270	80	M40X1.5	M16X36	51.5	15	680
180L	2,4,6,8	48k6	110	14	42.5	300	250	350	4-ø18.5	5	380	270	80	M40X1.5	M16X36	51.5	15	720
200	2,4,6,8	55m6	110	16	49	350	300	400	4-ø18.5	5	420	325	90	M50X1.5	M20X42	59	17	760
225S	4,6,8	60m6	140	18	53	400	350	450	8-ø18.5	5	465	335	100	M50X1.5	M20X42	64	19	825
225M	2	55m6	110	16	49	400	350	450	8-ø18.5	5	465	335	80	M50X1.5	M20X42	59	19	820
225M	4,6,8	60m6	140	18	53	400	350	450	8-ø18.5	5	465	335	100	M50X1.5	M20X42	64	19	850
250M	2	60m6	140	18	53	500	450	550	8-ø18.5	5	520	370	100	M63X 1.5	M20X42	64	20	925
250M	4,6,8	65m6	140	18	58	500	450	550	8-ø18.5	5	520	370	100	M63X 1.5	M20X42	69	20	925
280S	2	65m6	140	18	58	500	450	550	8-ø18.5	5	570	395	100	M63X 1.5	M20X42	69	22	960
280S	4,6,8	75m6	140	20	67.5	500	450	550	8-ø18.5	5	570	395	100	M63X 1.5	M20X42	79.5	22	975
280M	2	65m6	140	18	58	500	450	550	8-ø18.5	5	570	395	100	M63X 1.5	M20X42	69	22	1000

CT Performance Data 50Hz

Synchrnous speed (2Pole/3000rpm, 4Pole/1500rpm, 6Pole/1000rpm, 8Pole/750rpm)

Rated Power KW	Rated Power HP	POLE	Frame Size	Rated Speed (RPM)	IFL 380V (A)	IFL 400V (A)	IFL 415V (A)	Power Factor COSø	Efficiency %
18.5	25	2	160L	2930	34.60	32.90	31.80	0.90	90.2
		4	180M	1470	36.20	34.40	33.10	0.86	90.2
		6	200L-1	970	38.50	36.60	35.30	0.81	90.2
		8	225S	730	41.00	39.00	37.50	0.76	90.2
22	30	2	180M	2940	41.00	38.90	37.60	0.90	90.6
		4	180L	1470	42.90	40.80	39.30	0.86	90.7
		6	200L-2	970	44.70	42.50	40.90	0.83	90.2
		8	225M	740	47.20	44.80	43.20	0.78	90.8
30	40	2	200L-1	2950	55.40	52.60	50.70	0.90	91.5
		4	200L	1470	57.50	54.60	52.70	0.86	92.1
		6	225M	980	59.30	56.30	54.30	0.84	91.5
		8	250M	740	63.30	60.10	58.00	0.79	91.2
37	50	2	200L-2	2950	67.90	64.50	62.20	0.90	92.0
		4	225S	1480	69.70	66.20	63.80	0.87	92.7
		6	250M	980	70.10	66.60	64.20	0.86	92.2
		8	280S	740	77.50	73.60	71.00	0.79	91.8
45	60	2	225M	2970	82.10	78.00	75.30	0.90	92.5
		4	225M	1480	84.50	80.30	77.40	0.87	93.0
		6	280S	980	86.00	81.70	78.70	0.86	92.5
		8	280M	740	94.10	89.40	86.20	0.79	92.0
55	75	2	250M	2970	99.60	94.60	91.30	0.90	93.2
		4	250M	1480	103.00	97.90	94.30	0.87	93.3
		6	280M	985	105.00	99.80	96.10	0.86	92.9
		8	315S	740	110.80	105.30	101.50	0.81	93.1
75	100	2	280S	2970	134.80	128.10	123.50	0.90	93.9
		4	280S	1480	138.10	131.20	126.50	0.88	93.8
		6	315S	990	142.00	134.90	130.00	0.86	93.7
		8	315M	740	150.10	142.60	137.40	0.81	93.7
90	125	2	280M	2970	159.50	151.50	146.10	0.91	94.2
		4	280M	1480	165.00	157.00	151.00	0.88	94.1
		6	315M	990	170.00	161.50	155.70	0.86	93.9
		8	315L-1	740	177.40	168.50	162.40	0.82	94.0
110	150	2	315S	2980	194.60	184.90	178.20	0.91	94.4
		4	315S	1480	200.50	190.50	183.60	0.88	94.7
		6	315L-1	990	206.00	196.00	189.00	0.86	94.5
		8	315L-2	740	216.00	206.00	198.00	0.82	94.2
132	180	2	315M	2980	233.00	221.40	213.40	0.91	94.6
		4	315M	1480	240.00	228.00	220.00	0.88	95.0
		6	315L-2	990	244.00	232.00	223.00	0.87	94.6
		8	355M-1	740	259.00	246.00	237.00	0.82	94.6
160	215	2	315L-1	2980	282.10	270.00	258.40	0.91	94.7
		4	315L-1	1480	287.00	273.00	263.00	0.89	95.2
		6	355M-1	990	291.00	275.00	267.00	0.87	95.4
		8	355M-2	740	315.00	298.00	292.00	0.81	94.7
200	270	2	315L-2	2980	347.70	330.10	318.40	0.92	95.0
		4	315L-2	1480	358.00	340.10	327.80	0.89	95.4
		6	355M-2	990	361.00	342.00	330.00	0.88	95.5
		8	355L	740	393.00	370.00	361.00	0.82	94.8
250	340	2	355M-2	2980	429.00	408.00	393.00	0.92	95.6
		4	355M	1490	440.00	420.00	403.00	0.90	95.6
		6	355L	990	448.00	425.00	409.00	0.89	95.6
315	430	2	355L-2	2980	537.00	510.00	491.00	0.93	95.7
		4	355L	1490	554.00	521.00	506.00	0.90	95.7

Note : 1. IFL = Full load current ; IST = Locked rotor current ; TFL = Full load torque ; TST = Lock

2. Tolerance according to IEC 60034-1

3. The data above is based on 400V design, 380V and 415V data is the reference value.

CT Performance Data 60Hz

Synchrnous speed (2Pole/3600rpm, 4Pole/1800rpm, 6Pole/1200rpm, 8Pole/900rpm)

Rated Power KW	Rated Power HP	Pole	Frame Size	Rated Speed (RPM)	IFL 440V (A)	IFL 460V (A)	IFL 480V (A)	Power Factor COSø	Efficiency η %
0.18	0.25	6	71-1	1020	0.64	0.61	0.59	0.66	56.0
		8	80-1	756	0.76	0.73	0.70	0.61	51.0
0.25	0.33	4	**71-1**	**1632**	0.62	0.59	0.57	**0.76**	**70.0**
		6	71-2	1020	0.82	0.78	0.75	0.68	59.0
		8	80-2	768	0.99	0.95	0.91	0.61	54.0
0.37	0.5	2	**71-1**	**3300**	0.84	0.80	0.77	**0.86**	**72.5**
		4	**71-2**	**1614**	0.96	0.92	0.88	**0.77**	**71.3**
		6	80-1	1068	1.12	1.07	1.03	0.70	62.0
		8	90S	792	1.28	1.22	1.17	0.61	62.0
0.55	0.75	2	**71-2**	**3312**	1.29	1.23	1.18	**0.89**	**78.0**
		4	80-1	1686	1.38	1.32	1.27	0.75	72.7
		6	80-2	1068	1.55	1.48	1.42	0.72	65.0
		8	90L	792	1.87	1.78	1.71	0.61	63.0
0.75	1	2	80-1	3406	1.55	1.49	1.43	0.85	75.1
		4	80-2	1698	1.81	1.73	1.66	0.76	72.6
		6	90S	1092	1.98	1.89	1.81	0.72	69.0
		8	100L-1	828	2.08	1.99	1.91	0.67	71.0
1.1	1.5	2	80-2	3412	2.25	2.15	2.06	0.84	78.6
		4	90S	1687	2.50	2.40	2.30	0.80	76.5
		6	90L	1092	2.75	2.63	2.52	0.73	72.0
		8	100L-2	828	2.89	2.77	2.65	0.69	73.0
1.5	2	2	90S	3418	2.94	2.81	2.69	0.86	79.8
		4	90L	1692	3.28	3.14	3.01	0.79	79.2
		6	100L	1128	3.54	3.39	3.25	0.75	76.0
		8	112M	816	3.80	3.63	3.48	0.69	75.0
2.2	3	2	90L	3419	4.15	3.97	3.80	0.86	82.2
		4	100L-1	1680	4.40	4.21	4.04	0.83	81.1
		6	112M	1128	4.81	4.60	4.41	0.76	79.0
		8	132S	852	5.10	4.87	4.67	0.71	78.0
3	4	2	100L	3433	5.44	5.20	4.99	0.89	83.3
		4	100L-2	1699	5.87	5.62	5.38	0.82	83.0
		6	132S	1152	6.39	6.11	5.86	0.76	81.0
		8	132M	852	6.74	6.44	6.18	0.73	79.0
3.7	5	2	112M	3444	6.65	6.36	6.10	0.88	84.6
		4	112M	1716	7.03	6.72	6.44	0.82	83.6
		6	132M-1	1152	7.77	7.43	7.13	0.76	82.0
		8	160M-1	864	8.12	7.77	7.44	0.73	81.0
4	5.5	2	112M	3446	7.17	6.86	6.57	0.92	84.9
		4	112M	1726	7.60	7.27	6.97	0.84	84.4
		6	132M-1	1152	8.42	8.05	7.72	0.76	82.0
		8	160M-1	864	8.81	8.43	8.08	0.73	81.0
5.5	7.5	2	132S-1	3480	9.59	9.17	8.79	0.91	86.2
		4	132S	1746	10.10	9.67	9.26	0.83	86.6
		6	132M-2	1152	11.05	10.57	10.13	0.77	84.0
		8	160M-2	864	11.75	11.23	10.77	0.74	83.0
7.5	10	2	132S-2	3498	12.87	12.31	11.80	0.90	87.5
		4	132M	1738	13.47	12.89	12.35	0.86	87.9
		6	160M	1164	14.77	14.13	13.54	0.77	86.0
		8	160L	864	15.29	14.62	14.01	0.75	85.5
11	15	2	160M-1	3520	18.22	17.43	16.70	0.90	90.3
		4	160M	1752	19.43	18.59	17.81	0.84	89.1
		6	160L	1164	21.16	20.24	19.40	0.78	87.5
		8	180L	876	21.94	20.98	20.11	0.76	87.5
15	20	2	160M-2	3521	24.70	23.63	22.64	0.90	91.0
		4	160L	1754	26.17	25.03	23.99	0.85	90.3
		6	180L	1164	27.29	26.10	25.02	0.81	89.0
		8	200L	876	29.36	28.09	26.92	0.76	88.0

Note : 1. IFL = Full load current ; IST = Locked rotor current ; TFL = Full load torque ; TST = Locl

2. Tolerance according to IEC 60034-1

3. The data above is based on 50Hz 400V design, other data is the reference value.

CT B35 Foot & Flange Mounting Dimensions

F#71~90 without lifting bolt

Frame	Poles	Mounting dimensions(mm)														Overall Dimension(mm)											
Size		A	B	C	D	E	F	G	H	K	M	N	P	S	T	AA	AB	AC	LA	KK	BB	ED	DH	GA	HA	HD	L
71	2,4,6	112	90	45	14j6	30	5	11	71	7	130	110	160	4-ø9	3.5	32	144	145	8	M25X1.5	120	20	M4X10	16	8	208	250
80	2,4,6,8	125	100	50	19j6	40	6	15.5	80	10	165	130	200	4-ø12	3.5	34	160	175	12	M25X1.5	130	22	M6X16	21.5	10	230	295
90S	2,4,6,8	140	100	56	24j6	50	8	20	90	10	165	130	200	4-ø12	3.5	36	180	190	12	M25X1.5	135	32	M8X19	27	12.5	260	320
90L	2,4,6,8	140	125	56	24j6	50	8	20	90	10	165	130	200	4-ø12	3.5	36	180	190	12	M25X1.5	160	32	M8X19	27	12.5	260	345
100	2,4,6,8	160	140	63	28j6	60	8	24	100	12	215	180	250	4-ø14.5	4	40	200	215	14	M32X1.5	182	40	M10X22	31	14	275	385
112	2,4,6,8	190	140	70	28j6	60	8	24	112	12	215	180	250	4-ø14.5	4	45	230	236	14	M32X1.5	195	40	M10X22	31	14	310	410
132S	2,4,6,8	216	140	89	38k6	80	10	33	132	12	265	230	300	4-ø14.5	4	52	265	275	14	M32X1.5	205	56	M12X28	41	16	350	480
132M	2,4,6,8	216	178	89	38k6	80	10	33	132	12	265	230	300	4-ø14.5	4	52	265	275	14	M32X1.5	245	56	M12X28	41	16	350	520
160M	2,4,6,8	254	210	108	42k6	110	12	37	160	14.5	300	250	350	4-ø18.5	5	67	320	330	15	M40X1.5	260	80	M16X36	45	19	425	610
160L	2,4,6,8	254	254	108	42k6	110	12	37	160	14.5	300	250	350	4-ø18.5	5	67	320	330	15	M40X1.5	305	80	M16X36	45	19	425	655
180M	2,4,6,8	279	241	121	48k6	110	14	42.5	180	14.5	300	250	350	4-ø18.5	5	74	350	380	15	M40X1.5	297	80	M16X36	51.5	22	460	680
180L	2,4,6,8	279	279	121	48k6	110	14	42.5	180	14.5	300	250	350	4-ø18.5	5	74	350	380	15	M40X1.5	335	80	M16X36	51.5	22	460	720
200	2,4,6,8	318	305	133	55m6	110	16	49	200	18.5	350	300	400	4-ø18.5	5	80	395	420	17	M50X1.5	370	90	M20X42	59	25	515	760
225S	4,6,8	356	286	149	60m6	140	18	53	225	18.5	400	350	450	8-ø18.5	5	80	436	465	19	M50X1.5	355	100	M20X42	64	28	560	825
225M	2	356	311	149	55m6	110	16	49	225	18.5	400	350	450	8-ø18.5	5	80	436	465	19	M50X1.5	380	80	M20X42	59	28	560	850
225M	4,6,8	356	311	149	60m6	140	18	53	225	18.5	400	350	450	8-ø18.5	5	80	436	465	19	M50X1.5	380	100	M20X42	64	28	560	850
250M	2	406	349	168	60m6	140	18	53	250	24	500	450	550	8-ø18.5	5	88	495	520	20	M63X 1.5	440	100	M20X42	64	33	620	925
250M	4,6,8	406	349	168	65m6	140	18	58	250	24	500	450	550	8-ø18.5	5	88	495	520	20	M63X 1.5	440	100	M20X42	69	33	620	925
280S	2	457	368	190	65m6	140	18	58	280	24	500	450	550	8-ø18.5	5	90	550	570	22	M63X 1.5	494	100	M20X42	69	35	685	960
280S	4,6,8	457	368	190	75m6	140	20	67.5	280	24	500	450	550	8-ø18.5	5	90	550	570	22	M63X 1.5	494	100	M20X42	79.5	35	685	975
280M	2	457	419	190	65m6	140	18	58	280	24	500	450	550	8-ø18.5	5	90	550	570	22	M63X 1.5	535	100	M20X42	69	35	685	1000
280M	4,6,8	457	419	190	75m6	140	20	67.5	280	24	500	450	550	8-ø18.5	5	90	550	570	22	M63X 1.5	535	100	M20X42	79.5	35	685	1015
315S	2	508	406	216	65m6	140	18	58	315	28	600	550	660	8-ø24	6	120	635	650	24	M63X 1.5	515	100	M20X42	69	45	820	1160
315S	4,6,8	508	406	216	80m6	170	22	71	315	28	600	550	660	8-ø24	6	120	635	650	24	M63X 1.5	515	130	M20X42	85	45	820	1190
315M	2	508	457	216	65m6	140	18	58	315	28	600	550	660	8-ø24	6	120	635	650	24	M63X 1.5	625	100	M20X42	69	45	820	1270
315M	4,6,8	508	457	216	80m6	170	22	71	315	28	600	550	660	8-ø24	6	120	635	650	24	M63X 1.5	625	130	M20X42	85	45	820	1300
315L	2	508	508	216	65m6	140	18	58	315	28	600	550	660	8-ø24	6	120	635	650	24	M63X 1.5	625	100	M20X42	69	45	820	1270
315L	4,6,8	508	508	216	80m6	170	22	71	315	28	600	550	660	8-ø24	6	120	635	650	24	M63X 1.5	625	130	M20X42	85	45	820	1300
335M	2	610	560	254	75m6	140	20	67.5	355	28	740	680	800	8-ø24	6	125	735	735	25	M63X 1.5	775	110	M24X50	79.5	49	1000	1500
335M	4,6,8	610	560	254	95m6	170	25	86	355	28	740	680	800	8-ø24	6	125	735	735	25	M63X 1.5	775	140	M24X50	100	49	1000	1530
335L	2	610	630	254	75m6	140	20	67.5	355	28	740	680	800	8-ø24	6	125	735	735	25	M63X 1.5	775	110	M24X50	79.5	49	1000	1500
335L	4,6,8	610	630	254	95m6	170	25	86	355	28	740	680	800	8-ø24	6	125	735	735	25	M63X 1.5	775	140	M24X50	100	49	1000	1530

Data are subjected to revisions without any prior notice.

CT B3 Foot Mounting Dimensions

F#71~90 without lifting bolt

Frame Size	Poles	Mounting dimensions(mm)									Overall Dimension(mm)										
		A	B	C	D	E	F	G	H	K	AA	AB	AC	BB	KK	ED	DH	GA	HA	HD	L
71	2,4,6	112	90	45	14j6	30	5	11	71	7	32	144	145	120	M25X1.5	20	M4X10	16	8	208	250
80	2,4,6,8	125	100	50	19j6	40	6	15.5	80	10	34	160	175	130	M25X1.5	25	M6X16	21.5	10	210	295
90S	2,4,6,8	140	100	56	24j6	50	8	20	90	10	36	180	190	160	M25X1.5	40	M8X19	27	12.5	230	345
90L	2,4,6,8	140	125	56	24j6	50	8	20	90	10	36	180	190	160	M25X1.5	40	M8X19	27	12.5	230	345
100	2,4,6,8	160	140	63	28j6	60	8	24	100	12	40	200	215	182	M32X1.5	45	M10X22	31	14	265	385
112	2,4,6,8	190	140	70	28j6	60	8	24	112	12	45	230	236	195	M32X1.5	45	M10X22	31	14	287	405
132S	2,4,6,8	216	140	89	38k6	80	10	33	132	12	52	265	275	245	M32X1.5	63	M12X28	41	16	330	515
132M	2,4,6,8	216	178	89	38k6	80	10	33	132	12	52	265	275	245	M32X1.5	63	M12X28	41	16	330	515
160M	2,4,6,8	254	210	108	42k6	110	12	37	160	14.5	67	320	330	260	M40X1.5	90	M16X36	45	19	410	610
160L	2,4,6,8	254	254	108	42k6	110	12	37	160	14.5	67	320	330	305	M40X1.5	90	M16X36	45	19	410	655
180M	2,4,6,8	279	241	121	48k6	110	14	42.5	180	14.5	74	350	380	297	M40X1.5	90	M16X36	51.5	22	455	685
180L	2,4,6,8	279	279	121	48k6	110	14	42.5	180	14.5	74	350	380	335	M40X1.5	90	M16X36	51.5	22	455	720
200	2,4,6,8	318	305	133	55m6	110	16	49	200	18.5	85	395	420	370	M50X1.5	90	M20X42	59	25	524	770
225S	4,6,8	356	286	149	60m6	140	18	53	225	18.5	80	436	465	355	M50X1.5	110	M20X42	64	28	560	825
225M	2	356	311	149	55m6	110	16	49	225	18.5	80	436	465	380	M50X1.5	90	M20X42	59	28	560	850
225M	4,6,8	356	311	149	60m6	140	18	53	225	18.5	80	436	465	380	M50X1.5	110	M20X42	64	28	560	850
250M	2	406	349	168	60m6	140	18	53	250	24	88	495	520	440	M63X 1.5	110	M20X42	64	33	625	935
250M	4,6,8	406	349	168	65m6	140	18	58	250	24	88	495	520	440	M63X 1.5	110	M20X42	69	33	625	935
280S	2	457	368	190	65m6	140	18	58	280	24	109	550	570	535	M63X 1.5	110	M20X42	69	35	685	1010
280S	4,6,8	457	368	190	75m6	140	20	67.5	280	24	109	550	570	535	M63X 1.5	110	M20X42	79.5	35	685	1010
280M	2	457	419	190	65m6	140	18	58	280	24	109	550	570	535	M63X 1.5	110	M20X42	69	35	685	1010
280M	4,6,8	457	419	190	75m6	140	20	67.5	280	24	109	550	570	535	M63X 1.5	110	M20X42	79.5	35	685	1010
315S	2	508	406	216	65m6	140	18	58	315	28	120	635	650	565	M63X 1.5	110	M20X42	69	45	870	1180
315S	4,6,8	508	406	216	80m6	170	22	71	315	28	120	635	650	565	M63X 1.5	140	M20X42	85	45	870	1210
315M	2	508	457	216	65m6	140	18	58	315	28	120	635	650	675	M63X 1.5	110	M20X42	69	45	870	1290
315M	4,6,8	508	457	216	80m6	170	22	71	315	28	120	635	650	675	M63X 1.5	140	M20X42	85	45	870	1320
315L	2	508	508	216	65m6	140	18	58	315	28	120	635	650	675	M63X 1.5	110	M20X42	69	45	870	1290
315L	4,6,8	508	508	216	80m6	170	22	71	315	28	120	635	650	675	M63X 1.5	140	M20X42	85	45	870	1320
355M	2	610	560	254	75m6	140	20	67.5	355	28	125	735	735	775	M63X 1.5	110	M24X50	79.5	49	995	1490
355M	4,6,8	610	560	254	95m6	170	25	86	355	28	125	735	735	775	M63X 1.5	140	M24X50	100	49	995	1520
355L	2	610	630	254	75m6	140	20	67.5	355	28	125	735	735	775	M63X 1.5	110	M24X50	79.5	49	995	1490
355L	4,6,8	610	630	254	95m6	170	25	86	355	28	125	735	735	775	M63X 1.5	140	M24X50	100	49	995	1520

Data are subjected to revisions without any prior notice.

CT Performance Data 60Hz

Synchrnous speed (2Pole/3600rpm, 4Pole/1800rpm, 6Pole/1200rpm, 8Pole/900rpm)

Rated Power KW	Rated Power HP	POLE	Frame Size	Rated Speed (RPM)	IFL 440V (A)	IFL 460V (A)	IFL 480V (A)	Power Factor COSø	Efficiency η %
18.5	25	2	160L	3516	29.88	28.58	27.39	0.90	91.7
		4	180M	1764	31.26	29.90	28.66	0.88	90.3
		6	200L-1	1164	33.25	31.80	30.48	0.81	90.0
		8	225S	876	35.41	33.87	32.46	0.76	90.0
22	30	2	180M	3528	35.41	33.87	32.46	0.90	90.6
		4	180L	1764	37.05	35.44	33.96	0.88	91.3
		6	200L-2	1164	38.60	36.93	35.39	0.83	90.0
		8	225M	880	40.76	38.99	37.37	0.78	90.5
30	40	2	200L-1	3540	47.85	45.77	43.86	0.89	92.0
		4	200L	1764	49.66	47.50	45.52	0.89	92.1
		6	225M	1176	51.21	48.99	46.95	0.84	91.5
		8	250M	888	54.67	52.29	50.11	0.79	91.0
37	50	2	200L-2	3540	58.64	56.09	53.75	0.91	92.3
		4	225S	1476	60.20	57.58	55.18	0.89	92.4
		6	250M	1176	60.54	57.91	55.50	0.86	92.0
		8	280S	888	66.93	64.02	61.35	0.82	91.7
45	60	2	225M	3564	70.90	67.82	65.00	0.90	93.0
		4	225M	1776	72.98	69.80	66.90	0.89	92.7
		6	280S	1176	74.27	71.04	68.08	0.87	92.5
		8	280M	888	81.27	77.73	74.50	0.81	91.8
55	75	2	250M	3564	86.02	82.28	78.85	0.89	93.2
		4	250M	1776	88.95	85.09	81.54	0.88	93.0
		6	280M	1182	90.68	86.74	83.13	0.88	92.6
		8	315S	888	95.69	91.53	87.72	0.82	93.6
75	100	2	280S	3564	116.42	111.36	106.72	0.91	93.7
		4	280S	1776	119.27	114.08	109.33	0.90	93.7
		6	315S	1188	122.64	117.30	112.42	0.86	94.4
		8	315M	888	129.63	124.00	118.83	0.83	93.9
90	125	2	280M	3564	137.75	131.76	126.27	0.91	94.1
		4	280M	1776	142.50	136.30	130.63	0.89	94.2
		6	315M	1188	146.82	140.43	134.58	0.86	94.9
		8	315L-1	888	153.21	146.55	140.44	0.83	94.1
110	150	2	315S	3576	168.06	160.76	154.06	0.92	94.5
		4	315S	1776	173.16	165.63	158.73	0.89	95.3
		6	315L-1	1188	177.91	170.17	163.08	0.86	94.9
		8	315L-2	888	186.55	178.43	171.00	0.82	94.2
132	180	2	315M	3576	201.23	192.48	184.46	0.92	94.9
		4	315M	1776	207.27	198.26	190.00	0.88	95.6
		6	315L-2	1188	210.73	201.57	193.17	0.87	95.0
		8	355M-1	888	223.68	213.96	205.04	0.84	95.3
160	215	2	315L-1	3576	243.63	233.04	223.33	0.92	95.6
		4	315L-1	1776	247.86	237.09	227.21	0.89	95.6
		6	355M-1	1188	251.32	240.39	230.38	0.88	95.2
		8	355M-2	888	272.05	260.22	249.38	0.83	95.3
200	270	2	315L-2	3576	300.29	287.23	275.26	0.92	95.4
		4	315L-2	1776	309.18	295.74	283.42	0.89	95.8
		6	355M-2	1188	311.77	298.22	285.79	0.89	96.1
		8	355L	888	339.41	324.65	311.13	0.85	95.7
250	340	2	355M-2	3576	370.50	354.39	339.63	0.93	95.3
		4	355M	1788	380.00	363.48	348.33	0.90	95.5
		6	355L	1188	386.91	370.09	354.67	0.90	96.3
315	430	2	355L-2	3576	463.77	443.61	425.13	0.93	95.8
		4	355L	1788	478.45	457.65	438.58	0.92	95.6

Note : 1. IFL = Full load current ; IST = Locked rotor current ; TFL = Full load torque ; TST = Locked r

2. Tolerance according to IEC 60034-1

3. The data above is based on 50Hz 400V design, other data is the reference value.